View from Top side (Scale 2:1)

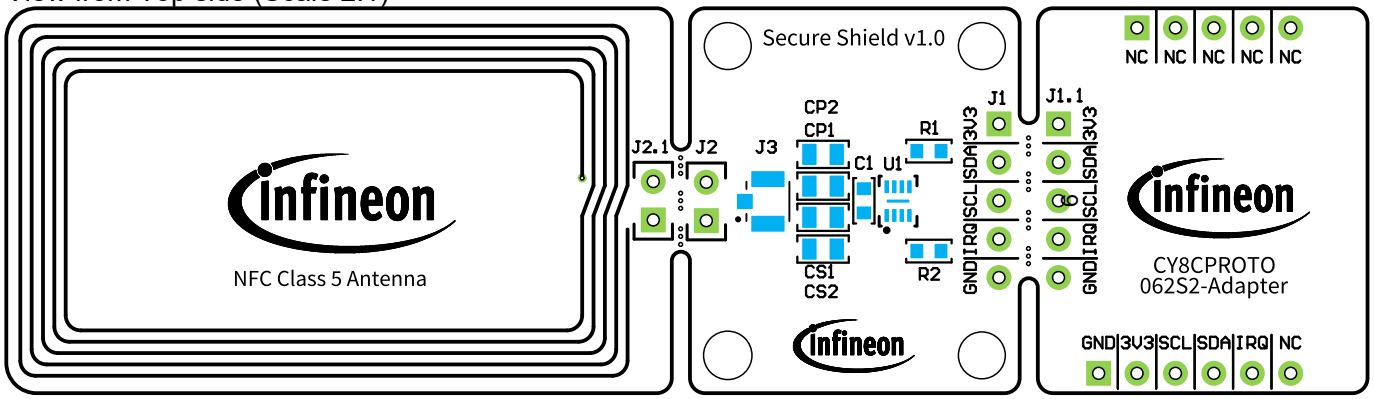

Title:	OPTIGA™ Authenticate NBT Development Shield
Variant	NBT Secure Shield v1.0 with PSoC adapter
Document Name:	Layout and assembly.PCBDwf
Size: A4	Sheet: 1 of 3
Date: 28.06.2024	Revision: V1.0

© Infineon Technologies AG 2024. All Rights Reserved.

Top Layer (Scale 2:1)

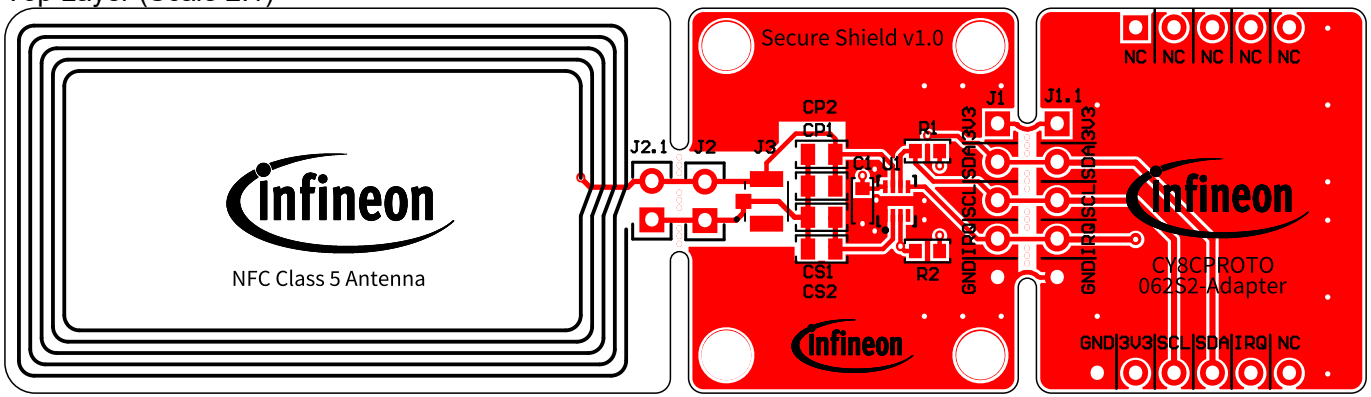

Bottom Layer (Scale 2:1)

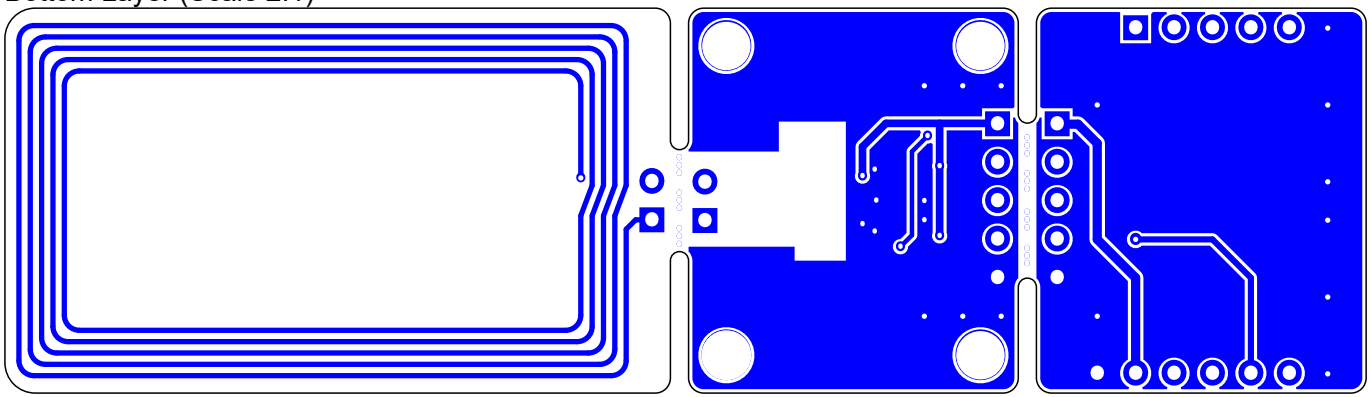

Title: OPTIGA™ Authenticate NBT Development Shield		
Variant NBT Secure Shield v1.0 with PSoC adapter		
Document Name: Layout and assembly.PCBDwf		
Size: A4	Sheet: 2 of 3	Revision: V1.0
Date: 28.06.2024	© Infineon Technologies AG 2024. All Rights Reserved.	

Layer Stack Legend

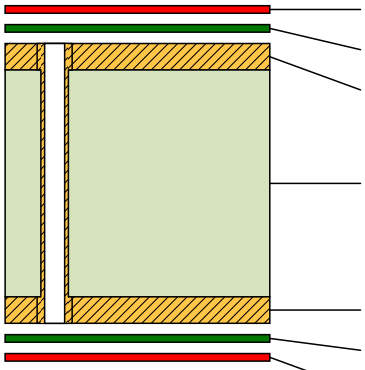

Material	Layer	Thickness	Dielectric Material	Type	Gerber
	Top Overlay			Legend	GTO
Surface Material	Top Solder	0.010mm	Solder Resist	Solder Mask	GTS
Copper	**Top Layer**	**0.035mm**		**Signal**	**GTL**
Core		*1.550mm*	*FR-4*	*Dielectric*	
Copper	**Bottom Layer**	**0.035mm**		**Signal**	**GBL**
Surface Material	Bottom Solder	0.010mm	Solder Resist	Solder Mask	GBS
	Bottom Overlay			Legend	GBO

Total thickness: 1.640mm

Title: OPTIGA™ Authenticate NBT Development Shield		
Variant NBT Secure Shield v1.0 with PSoC adapter		
Document Name: Layout and assembly.PCBDwf		
Size: A4	Sheet: 3 of 3	Revision: V1.0
Date: 28.06.2024	© Infineon Technologies AG 2024. All Rights Reserved.	